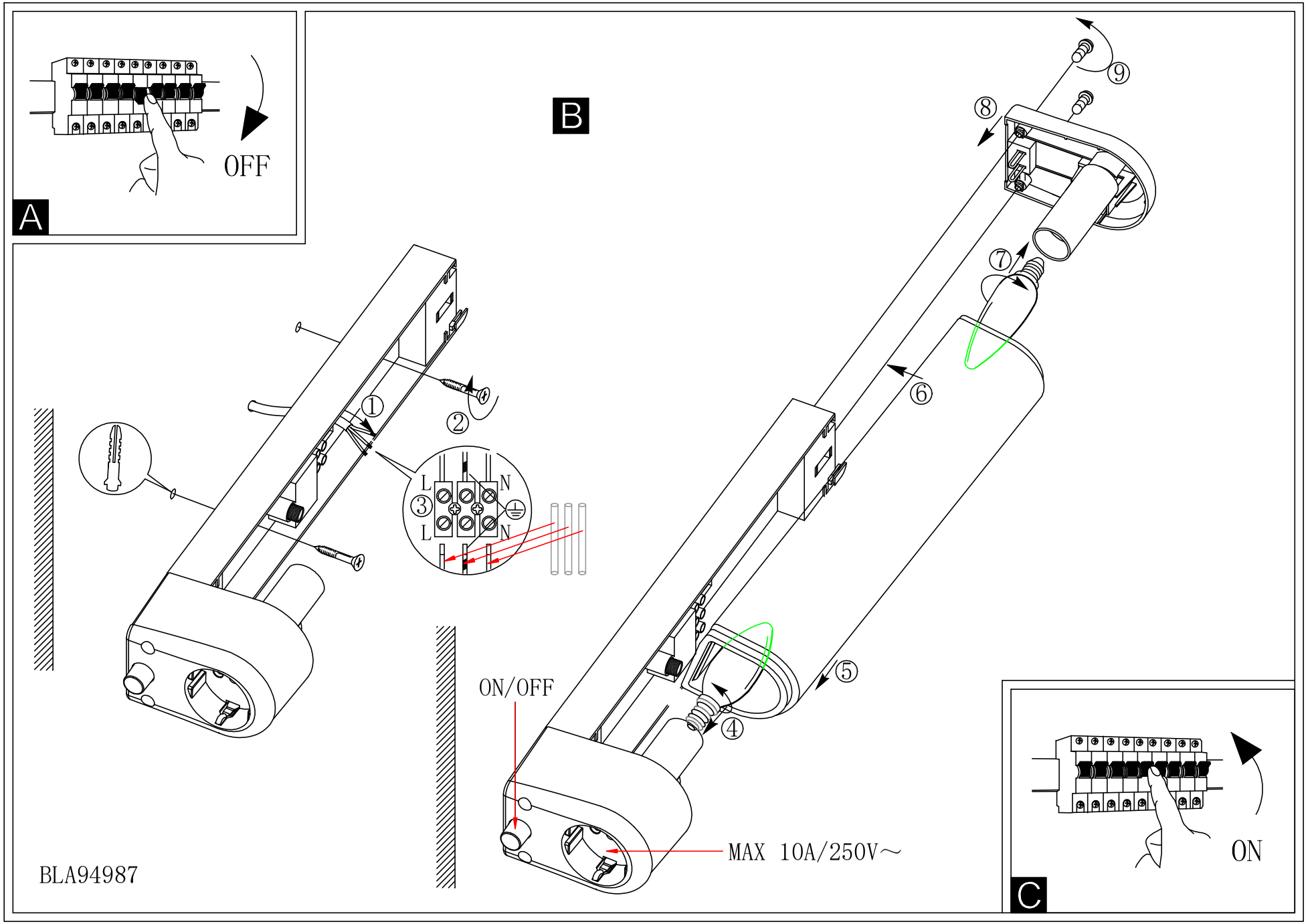
A
OFF
B
①
②
③
L
N
L
N
④
⑤
⑥
⑦
⑧
⑨
ON/OFF
MAX 10A/250V~
C
ON
BLA94987